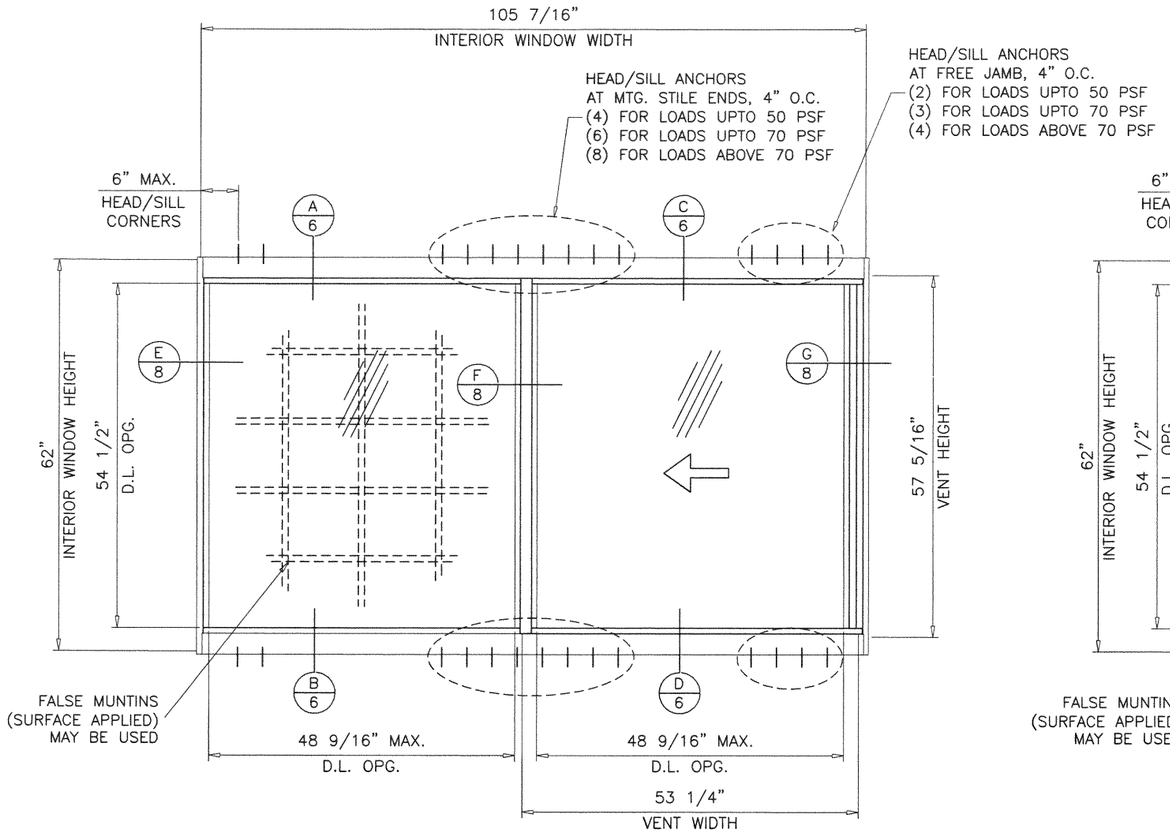

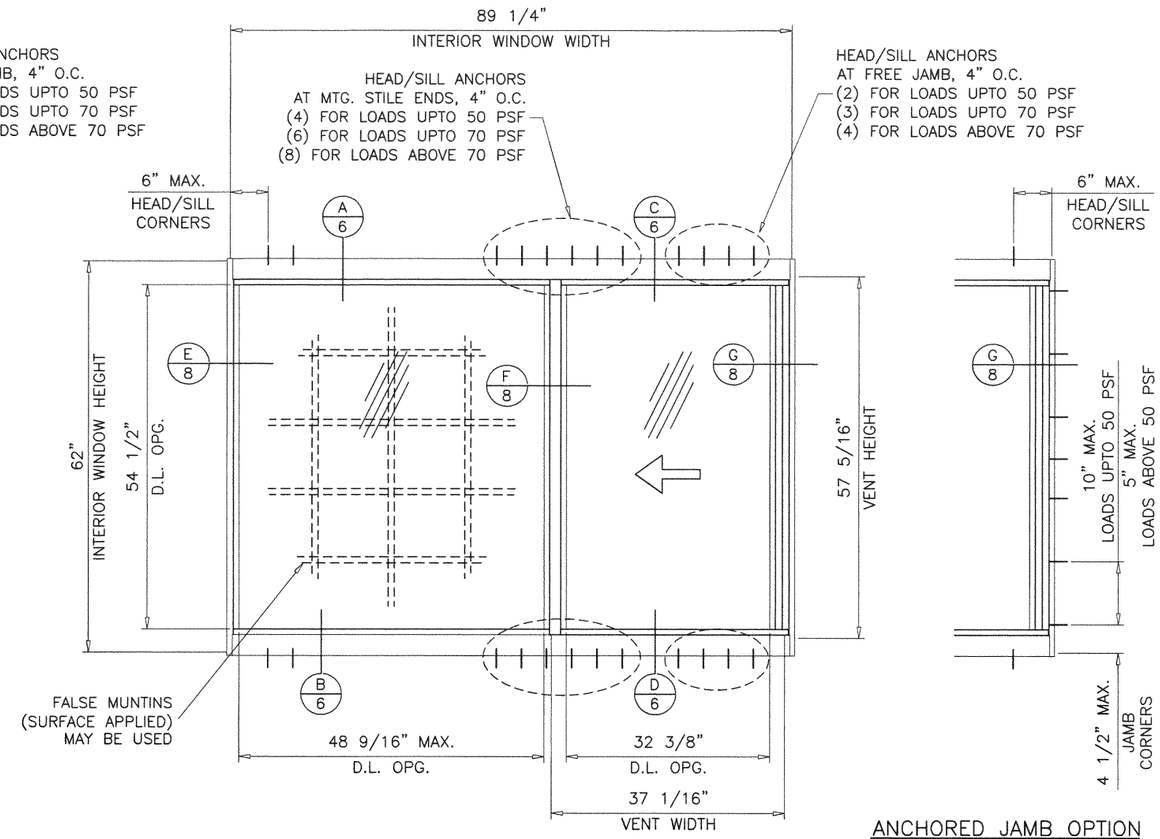

ANCHORED JAMB OPTION

TYPICAL ELEVATIONS

OX

SERIES-100HR
ALUMINUM HORIZONTAL ROLLING WINDOW

DESIGN LOAD RATINGS FOR THESE WINDOWS TO BE AS PER CHARTS SHOWN ON SHEETS 4 AND 5.

APPROVAL APPLIES TO SINGLE UNITS OR SIDE BY SIDE COMBINATIONS OF H.R./H.R. OR HORIZONTAL ROLLING WITH OTHER WINDOW TYPES IN MODULES OF TWO OR MORE WINDOWS USING F.B.C. APPROVED MULLIONS IN BETWEEN.

LOWER DESIGN PRESSURE FROM WINDOWS OR MULLION APPROVAL WILL APPLY TO ENTIRE SYSTEM.

THIS PRODUCT HAS BEEN DESIGNED AND TESTED TO COMPLY WITH THE REQUIREMENTS OF THE 2017 (6TH EDITION)/2020 (7TH EDITION) FLORIDA BUILDING CODE INCLUDING HIGH VELOCITY HURRICANE ZONE (HVHZ).

1BY OR 2BY WOOD BUCKS & BUCK FASTENERS BY OTHERS, MUST BE DESIGNED AND INSTALLED ADEQUATELY TO TRANSFER APPLIED PRODUCT LOADS TO THE BUILDING STRUCTURE.

ANCHORS SHALL BE CORROSION RESISTANT, SPACED AS SHOWN ON DETAILS AND INSTALLED PER MANUF'S INSTRUCTIONS. SPECIFIED EMBEDMENT TO BASE MATERIAL SHALL BE BEYOND WALL DRESSING OR STUCCO.

A LOAD DURATION INCREASE IS USED IN DESIGN OF ANCHORS INTO WOOD ONLY.

ALL SHIMS TO BE HIGH IMPACT, NON-METALLIC AND NON-COMPRESSIBLE.

MATERIALS INCLUDING BUT NOT LIMITED TO STEEL/METAL SCREWS, THAT COME INTO CONTACT WITH OTHER DISSIMILAR MATERIALS SHALL MEET THE REQUIREMENTS OF THE 2017/2020 FLORIDA BLDG. CODE & ADOPTED STANDARDS.

THIS PRODUCT APPROVAL IS GENERIC AND DOES NOT PROVIDE INFORMATION FOR A SITE SPECIFIC PROJECT, i.e. LIFE SAFETY OF THIS PRODUCT, ADEQUACY OF STRUCTURE RECEIVING THIS PRODUCT AND SEALING AROUND OPENING FOR WATER INFILTRATION RESISTANCE ETC.
CONDITIONS NOT SHOWN IN THIS DRAWING ARE TO BE ANALYZED SEPARATELY, AND TO BE REVIEWED BY BUILDING OFFICIAL.

DESIGN LOADS SHOWN ARE BASED ON 'ALLOWABLE STRESS DESIGN (ASD)'.

MANUFACTURER'S LABEL SHALL BE LOCATED ON A READILY VISIBLE LOCATION IN ACCORDANCE WITH SECTION 1709.9.3 OF FLORIDA BUILDING CODE. LABELING TO COMPLY WITH SECTION 1709.9.2.

THESE WINDOWS ARE RATED FOR LARGE & SMALL MISSILE IMPACT. SHUTTERS ARE NOT REQUIRED.

A- CONTRACTOR TO BE RESPONSIBLE FOR THE SELECTION, PURCHASE AND INSTALLATION OF THIS PRODUCT BASED ON THIS PRODUCT EVALUATION PROVIDED HE/SHE DOES NOT DEVIATE FROM THE CONDITIONS DETAILED ON THIS DOCUMENT.

B- THIS PRODUCT EVALUATION DOCUMENT WILL BE CONSIDERED INVALID IF ALTERED BY ANY MEANS.

C- SITE SPECIFIC PROJECTS SHALL BE PREPARED BY A FLORIDA REGISTERED ENGINEER OR ARCHITECT WHICH WILL BECOME THE ENGINEER OF RECORD (E.O.R.) FOR THE PROJECT AND WHO WILL BE RESPONSIBLE FOR THE PROPER USE OF THE P.E.D. ENGINEER OF RECORD, ACTING AS A DELEGATED ENGINEER TO THE P.E.D. ENGINEER SHALL SUBMIT TO THIS LATTER THE SITE SPECIFIC DRAWINGS FOR REVIEW.

D- THIS P.E.D. SHALL BEAR THE DATE AND ORIGINAL SEAL AND SIGNATURE OF THE PROFESSIONAL ENGINEER OF RECORD THAT PREPARED IT.

FL #30309

8/11/20

JALAL FAROOQ
LICENSE
No. 81223
STATE OF FLORIDA
PROFESSIONAL ENGINEER

AL-FAROOQ CORPORATION
ENGINEERS & PRODUCT DEVELOPMENT
9360 SUNSET DRIVE, SUITE 220
MIAMI, FLORIDA 33173 (C.A.N. 3538)
TEL. (305) 264-8100 FAX. (305) 262-6978
COMP-ANL\19-68F-AWC

SERIES-100HR ALUM HORIZ. ROLLING WDW. (L.M.I.)

Alcon Windows And Doors Corp.
7240 N.W. 46th Street
Miami, FL. 33166
Tel. (305) 553-0229 Fax. (786) 363-8141

revisions:			
no	date	by	description

date: 07-25-19
scale: 1/2"=1'-0"
dr. by: TARIQ
chk. by:

drawing no. 19-68F

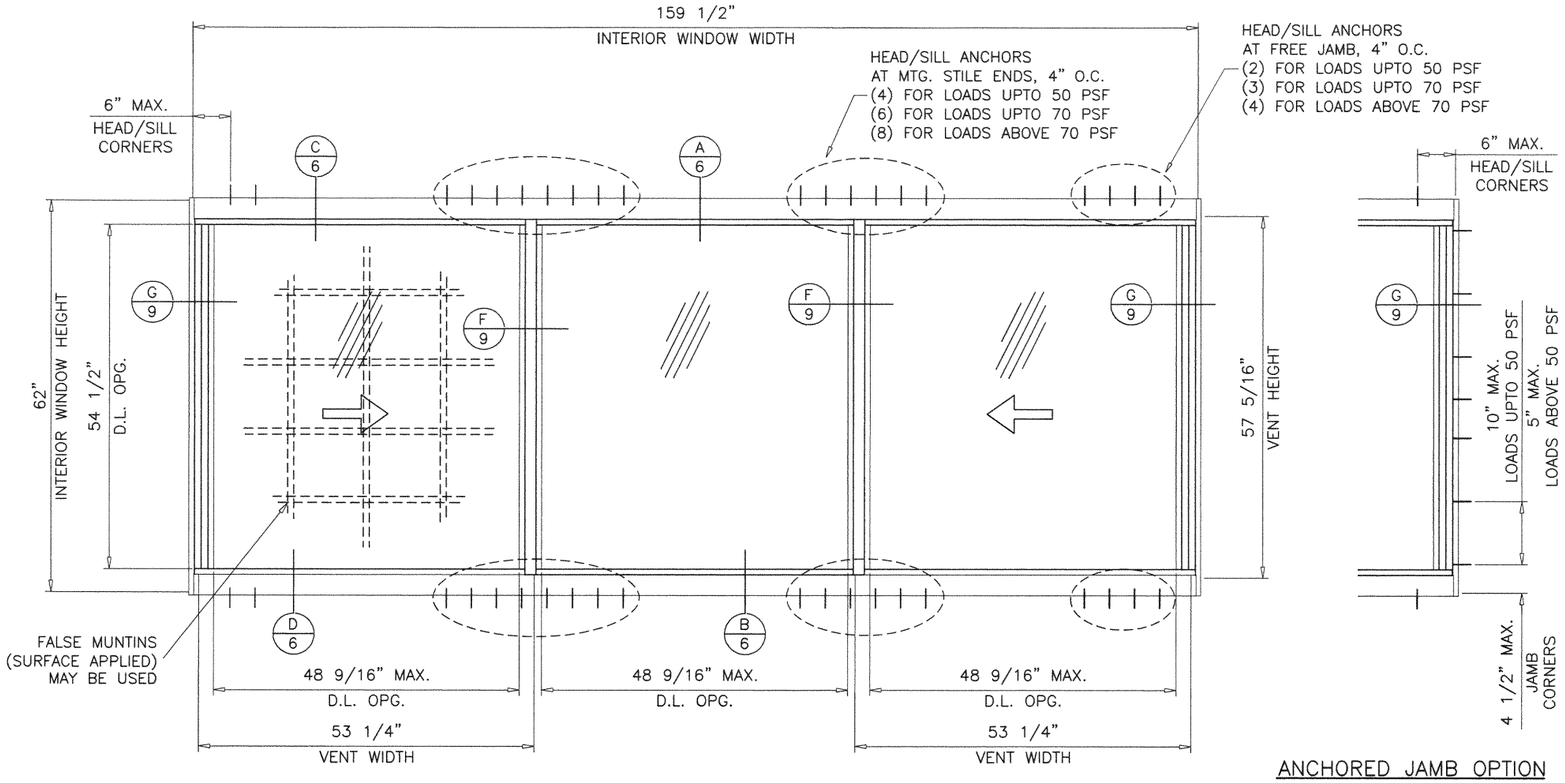

ANCHORED JAMB OPTION

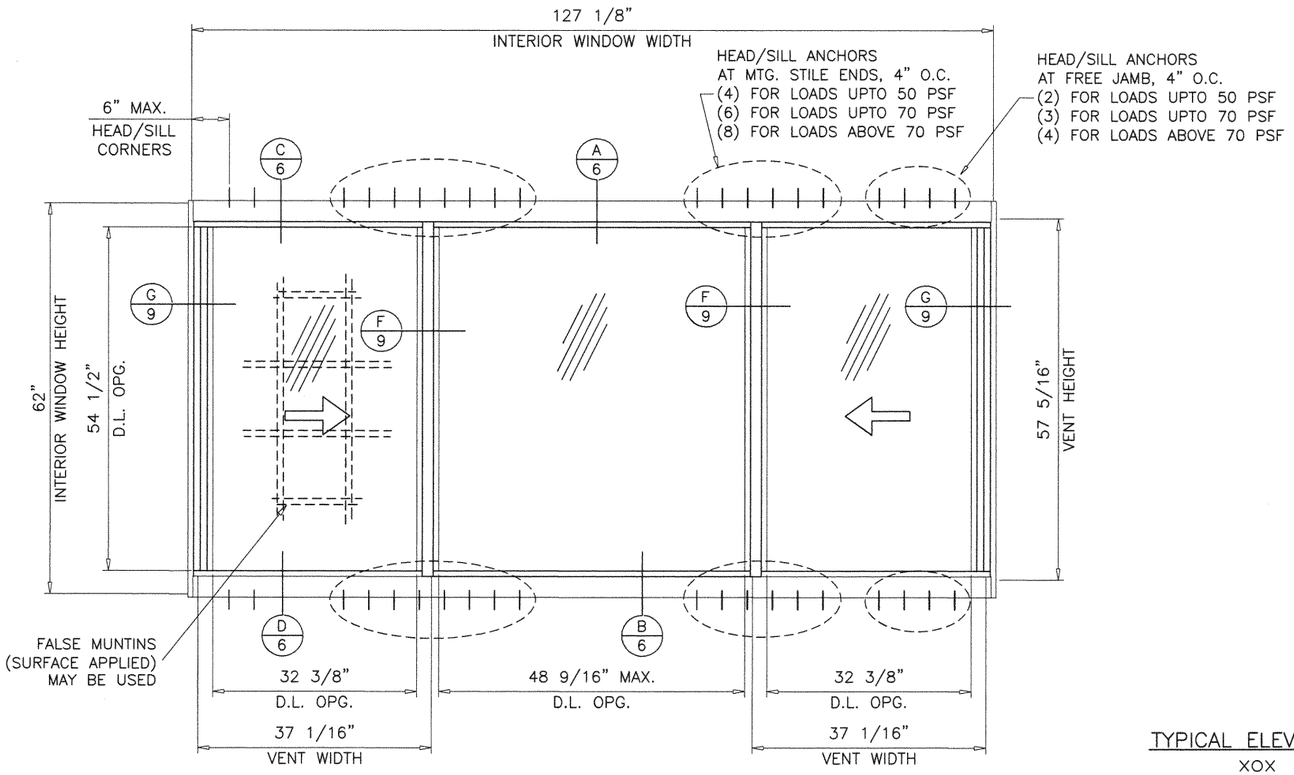

TYPICAL ELEVATIONS

XOX

8/11/20

FL #30309

JALAL FAROOQ
LICENSE
No. 81223
STATE OF FLORIDA
PROFESSIONAL ENGINEER

AL-FAROOQ CORPORATION
ENGINEERS & PRODUCT DEVELOPMENT
9360 SUNSET DRIVE, SUITE 220
MIAMI, FLORIDA 33173 (C.A.N. 3538)
TEL. (305) 264-8100 FAX. (305) 262-6978

COMP-ANL\19-68F-AWC

SERIES-100HR ALUM HORIZ. ROLLING WDW. (L.M.I.)

Alcon Windows And Doors Corp.
7240 N.W. 46th Street
Miami, FL. 33166
Tel. (305) 553-0229 Fax. (786) 363-8141

revisions:			
no	date	by	description

date: 07-25-19
scale: 1/2"=1'-0"
dr. by: TARIQ
chk. by:

drawing no.
19-68F

sheet 2 of 13

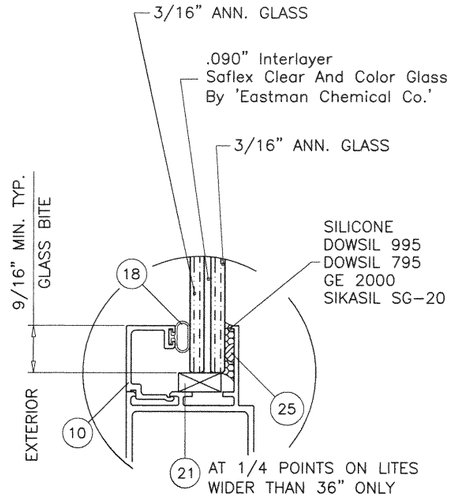

GLASS TYPE 'A'
7/16" OVERALL LAM. GLASS

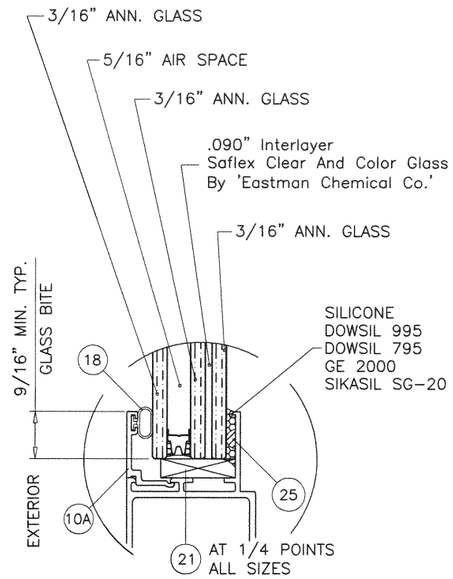

GLASS TYPE 'Ai'
15/16" OVERALL INSUL. LAM. GLASS

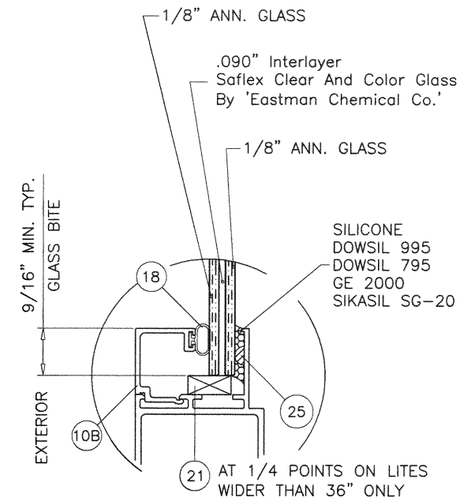

GLASS TYPE 'C'
5/16" OVERALL LAM. GLASS

NOTE:
EXTERIOR LITE OF GLASS TYPE 'Ai' TO BE TEMPERED
FOR INSTALLATIONS ABOVE 30 FT. OF GRADE.

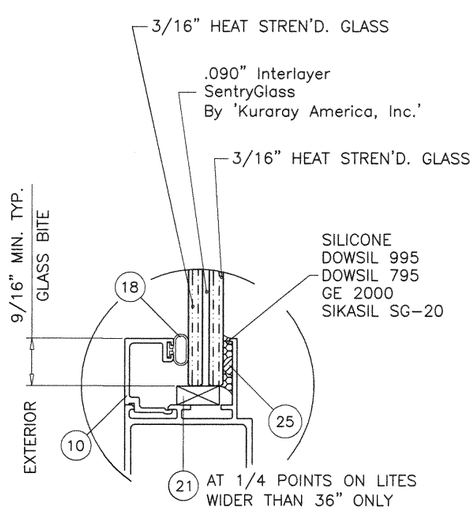

GLASS TYPE 'B'
7/16" OVERALL LAM. GLASS

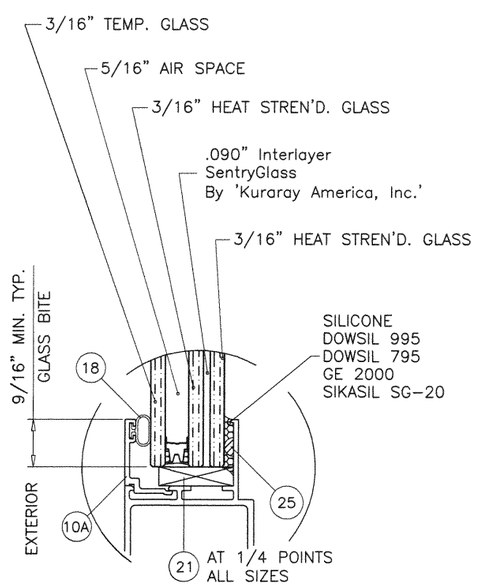

GLASS TYPE 'Bi'
15/16" OVERALL INSUL. LAM. GLASS

8/11/20

JALAL FAROOQ
LICENSE
No. 81223
STATE OF FLORIDA
PROFESSIONAL ENGINEER

FL #30309

AL-FAROOQ CORPORATION
ENGINEERS & PRODUCT DEVELOPMENT
9360 SUNSET DRIVE, SUITE 220
MIAMI, FLORIDA 33173 (C.A.N. 3538)
TEL. (305) 264-8100 FAX. (305) 262-6978

COMP-ANL\19-68F-AWC

SERIES-100HR ALUM HORIZ. ROLLING WDW. (L.M.I.)

Alcon Windows And Doors Corp.
7240 N.W. 46th Street
Miami, FL. 33166
Tel. (305) 553-0229 Fax. (786) 363-8141

revisions:

no	date	by	description

date: 07-25-19
scale: 1/2" = 1"
dr. by: TARIQ
chk. by:

drawing no.
19-68F

sheet 3 of 13

DESIGN LOAD CAPACITY – PSF
(XO OR OX SIZES)

INTERIOR FRAME DIMS.		W/O REINF.		WITH REINF.			
		GLASS 'A' & 'Ai'		GLASS TYPES 'B' & 'Bi'			
		W/ OR W/O JAMB ANC.		W/O JAMB ANCHORS		W/ JAMB ANCHORS	
WIDTH	HEIGHT	EXT.(+)	INT.(–)	EXT.(+)	INT.(–)	EXT.(+)	INT.(–)
25–1/2"	25"	70.0	70.0	80.0	95.0	80.0	95.0
36"		70.0	70.0	80.0	95.0	80.0	95.0
52–1/8"		70.0	70.0	80.0	95.0	80.0	95.0
73"		70.0	70.0	80.0	95.0	80.0	95.0
75–1/8"		70.0	70.0	80.0	95.0	80.0	95.0
105–1/4"		70.0	70.0	80.0	95.0	80.0	95.0
110"		70.0	70.0	80.0	95.0	80.0	95.0
25–1/2"	37–3/8"	70.0	70.0	80.0	95.0	80.0	95.0
36"		70.0	70.0	80.0	95.0	80.0	95.0
52–1/8"		70.0	70.0	80.0	95.0	80.0	95.0
73"		70.0	70.0	80.0	95.0	80.0	95.0
75–1/8"		70.0	70.0	80.0	95.0	80.0	95.0
105–1/4"		70.0	70.0	80.0	95.0	80.0	95.0
110"		70.0	70.0	80.0	95.0	80.0	95.0
25–1/2"	49–5/8"	70.0	70.0	80.0	95.0	80.0	95.0
36"		70.0	70.0	80.0	95.0	80.0	95.0
52–1/8"		70.0	70.0	80.0	95.0	80.0	95.0
73"		70.0	70.0	80.0	95.0	80.0	95.0
75–1/8"		70.0	70.0	80.0	95.0	80.0	95.0
105–1/4"		–	–	80.0	95.0	80.0	95.0
110"		–	–	80.0	95.0	80.0	95.0
25–1/2"	55"	70.0	70.0	80.0	95.0	80.0	95.0
36"		70.0	70.0	80.0	95.0	80.0	95.0
52–1/8"		70.0	70.0	80.0	95.0	80.0	95.0
73"		70.0	70.0	80.0	95.0	80.0	95.0
75–1/8"		70.0	70.0	80.0	95.0	80.0	95.0
105–1/4"		–	–	80.0	95.0	80.0	95.0
110"		–	–	80.0	95.0	80.0	95.0
25–1/2"	62"	70.0	70.0	80.0	95.0	80.0	95.0
36"		70.0	70.0	80.0	95.0	80.0	95.0
52–1/8"		70.0	70.0	80.0	95.0	80.0	95.0
73"		70.0	70.0	80.0	94.6	80.0	95.0
75–1/8"		70.0	70.0	80.0	92.7	80.0	95.0
105–1/4"		–	–	76.6	76.6	80.0	95.0
23"	23"	70.0	70.0	80.0	95.0	80.0	95.0
47"		70.0	70.0	80.0	95.0	80.0	95.0
71"		70.0	70.0	80.0	95.0	80.0	95.0
83"		70.0	70.0	80.0	95.0	80.0	95.0
95"		70.0	70.0	80.0	95.0	80.0	95.0
107"		70.0	70.0	80.0	95.0	80.0	95.0
23"	35"	70.0	70.0	80.0	95.0	80.0	95.0
47"		70.0	70.0	80.0	95.0	80.0	95.0
71"		70.0	70.0	80.0	95.0	80.0	95.0
83"		70.0	70.0	80.0	95.0	80.0	95.0
95"		70.0	70.0	80.0	95.0	80.0	95.0
107"		70.0	70.0	80.0	95.0	80.0	95.0
23"	47"	70.0	70.0	80.0	95.0	80.0	95.0
47"		70.0	70.0	80.0	95.0	80.0	95.0
71"		70.0	70.0	80.0	95.0	80.0	95.0
83"		70.0	70.0	80.0	95.0	80.0	95.0
95"		70.0	70.0	80.0	95.0	80.0	95.0
107"		–	–	80.0	95.0	80.0	95.0
23"	59"	70.0	70.0	80.0	95.0	80.0	95.0
47"		70.0	70.0	80.0	95.0	80.0	95.0
71"		70.0	70.0	80.0	95.0	80.0	95.0
83"		–	–	80.0	95.0	80.0	95.0
95"		–	–	80.0	90.8	80.0	95.0
107"		–	–	80.0	87.1	80.0	95.0

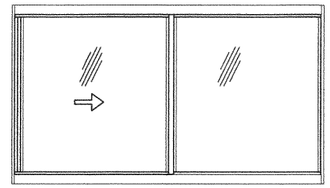

OPERATING VENTS TO BE 1/2 OF WINDOW WIDTH

'XO OR OX'

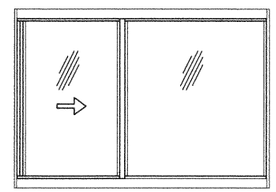

OPERATING VENTS TO BE 1/4 TO 1/3 OF WINDOW WIDTH

'XO OR OX'

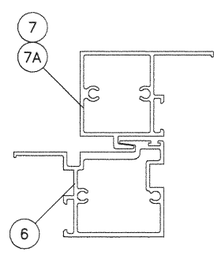

FIX. STILE
W/O REINF.

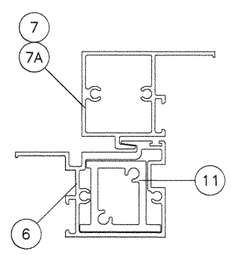

FIX. STILE
WITH REINF.

EXTERIOR LOADS SHOWN IN CHARTS ARE FOR WINDOWS WITH APPLIED RISER AT FRAME SILL. FOR STANDARD SILL (NO RISER) LIMIT MAX. EXTERIOR LOADS TO +66.7 PSF SEE SHEET 6 FOR DETAILS.

NOTE:
GLASS CAPACITIES ON THIS SHEET ARE BASED ON ASTM E1300–09 (3 SEC. GUSTS) AND FLORIDA BUILDING COMMISSION DECLARATORY STATEMENT DCA05–DEC–219

DESIGN LOAD CAPACITY – PSF
(XO OR OX SIZES)

INTERIOR FRAME DIMS.		W/O REINF.		WITH REINF.			
		GLASS 'A' & 'Ai'		GLASS TYPES 'B' & 'Bi'			
		W/ OR W/O JAMB ANC.		W/O JAMB ANCHORS		W/ JAMB ANCHORS	
WIDTH	HEIGHT	EXT.(+)	INT.(–)	EXT.(+)	INT.(–)	EXT.(+)	INT.(–)
25–1/2"	25"	70.0	70.0	80.0	95.0	80.0	95.0
36"		70.0	70.0	80.0	95.0	80.0	95.0
52–1/8"		70.0	70.0	80.0	95.0	80.0	95.0
73"		70.0	70.0	80.0	95.0	80.0	95.0
75–1/8"		70.0	70.0	80.0	95.0	80.0	95.0
105–1/4"		70.0	70.0	80.0	95.0	80.0	95.0
110"		70.0	70.0	80.0	95.0	80.0	95.0
25–1/2"	37–3/8"	70.0	70.0	80.0	95.0	80.0	95.0
36"		70.0	70.0	80.0	95.0	80.0	95.0
52–1/8"		70.0	70.0	80.0	95.0	80.0	95.0
73"		70.0	70.0	80.0	95.0	80.0	95.0
75–1/8"		70.0	70.0	80.0	95.0	80.0	95.0
105–1/4"		–	–	80.0	95.0	80.0	95.0
110"		–	–	80.0	95.0	80.0	95.0
25–1/2"	49–5/8"	70.0	70.0	80.0	95.0	80.0	95.0
36"		70.0	70.0	80.0	95.0	80.0	95.0
52–1/8"		70.0	70.0	80.0	95.0	80.0	95.0
73"		–	–	80.0	95.0	80.0	95.0
75–1/8"		–	–	80.0	95.0	80.0	95.0
25–1/2"	55"	70.0	70.0	80.0	95.0	80.0	95.0
36"		70.0	70.0	80.0	95.0	80.0	95.0
52–1/8"		70.0	70.0	80.0	95.0	80.0	95.0
73"		–	–	80.0	95.0	80.0	95.0
75–1/8"		–	–	80.0	95.0	80.0	95.0
25–1/2"	62"	70.0	70.0	80.0	95.0	80.0	95.0
36"		70.0	70.0	80.0	95.0	80.0	95.0
52–1/8"		70.0	70.0	80.0	95.0	80.0	95.0
73"		–	–	79.1	79.1	80.0	95.0
75–1/8"		–	–	78.1	78.1	80.0	95.0
23"	23"	70.0	70.0	80.0	95.0	80.0	95.0
47"		70.0	70.0	80.0	95.0	80.0	95.0
71"		70.0	70.0	80.0	95.0	80.0	95.0
83"		70.0	70.0	80.0	95.0	80.0	95.0
95"		70.0	70.0	80.0	95.0	80.0	95.0
107"		70.0	70.0	80.0	95.0	80.0	95.0
23"	35"	70.0	70.0	80.0	95.0	80.0	95.0
47"		70.0	70.0	80.0	95.0	80.0	95.0
71"		70.0	70.0	80.0	95.0	80.0	95.0
83"		70.0	70.0	80.0	95.0	80.0	95.0
95"		70.0	70.0	80.0	95.0	80.0	95.0
107"		–	–	80.0	95.0	80.0	95.0
23"	47"	70.0	70.0	80.0	95.0	80.0	95.0
47"		70.0	70.0	80.0	95.0	80.0	95.0
71"		70.0	70.0	80.0	95.0	80.0	95.0
83"		–	–	80.0	95.0	80.0	95.0
95"		–	–	80.0	95.0	80.0	95.0
23"	59"	70.0	70.0	80.0	95.0	80.0	95.0
47"		70.0	70.0	80.0	95.0	80.0	95.0
71"		–	–	80.0	90.9	80.0	95.0
83"		–	–	80.0	86.5	80.0	95.0

8/11/20

FL #30309

JALAL FAROOQ
LICENSE
No. 81223
STATE OF FLORIDA
PROFESSIONAL ENGINEER

AL-FAROOQ CORPORATION
ENGINEERS & PRODUCT DEVELOPMENT
9360 SUNSET DRIVE, SUITE 220
MIAMI, FLORIDA 33173 (C.A.N. 3538)
TEL. (305) 264-8100 FAX. (305) 262-6978
COMP–ANL\19–68F–AWC

SERIES–100HR ALUM HORIZ. ROLLING WDW. (L.M.I.)

Alcon Windows And Doors Corp.
7240 N.W. 46th Street
Miami, FL. 33166
Tel. (305) 553–0229 Fax. (786) 363–8141

revisions:

no	date	by	description

date: 07–25–19
scale: –
dr. by: TARIQ
chk. by:

drawing no.
19–68F

DESIGN LOAD CAPACITY – PSF (XO OR OX SIZES)			
INTERIOR FRAME DIMS.		W/O REINF. GLASS TYPE 'C' W/ OR W/O JAMB ANC.	
WIDTH	HEIGHT	EXT.(+)	INT.(–)
25–1/2"	25"	55.0	55.0
36"		55.0	55.0
52–1/8"		55.0	55.0
73"		55.0	55.0
75–1/8"		55.0	55.0
105–1/4"		55.0	55.0
110"		55.0	55.0
25–1/2"	37–3/8"	55.0	55.0
36"		55.0	55.0
52–1/8"		55.0	55.0
73"		55.0	55.0
75–1/8"		55.0	55.0
105–1/4"		55.0	55.0
110"		55.0	55.0
25–1/2"	49–5/8"	55.0	55.0
36"		55.0	55.0
52–1/8"		55.0	55.0
73"		55.0	55.0
75–1/8"		55.0	55.0
25–1/2"	55"	55.0	55.0
36"		55.0	55.0
52–1/8"		55.0	55.0
73"		55.0	55.0
75–1/8"		55.0	55.0
25–1/2"	62"	55.0	55.0
36"		55.0	55.0
52–1/8"		55.0	55.0
73"		55.0	55.0
75–1/8"		55.0	55.0
23"	23"	55.0	55.0
47"		55.0	55.0
71"		55.0	55.0
83"		55.0	55.0
95"		55.0	55.0
107"		55.0	55.0
23"	35"	55.0	55.0
47"		55.0	55.0
71"		55.0	55.0
83"		55.0	55.0
95"		55.0	55.0
107"		55.0	55.0
23"	47"	55.0	55.0
47"		55.0	55.0
71"		55.0	55.0
83"		55.0	55.0
95"		55.0	55.0
23"	59"	55.0	55.0
47"		55.0	55.0
71"		55.0	55.0

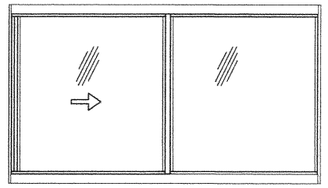

OPERATING VENTS TO BE 1/2 OF WINDOW WIDTH

'XO OR OX'

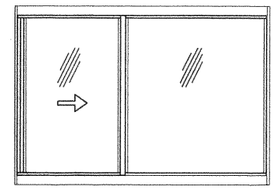

OPERATING VENTS TO BE 1/4 TO 1/3 OF WINDOW WIDTH

'XO OR OX'

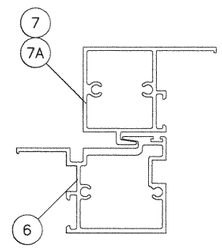

FIX. STILE
W/O REINF.

DESIGN LOAD CAPACITY – PSF (XO OR OX SIZES)			
INTERIOR FRAME DIMS.		W/O REINF. GLASS TYPE 'C' W/ OR W/O JAMB ANC.	
WIDTH	HEIGHT	EXT.(+)	INT.(–)
25–1/2"	25"	55.0	55.0
36"		55.0	55.0
52–1/8"		55.0	55.0
73"		55.0	55.0
75–1/8"		55.0	55.0
105–1/4"		55.0	55.0
110"		55.0	55.0
25–1/2"	37–3/8"	55.0	55.0
36"		55.0	55.0
52–1/8"		55.0	55.0
73"		55.0	55.0
75–1/8"		55.0	55.0
25–1/2"	49–5/8"	55.0	55.0
36"		55.0	55.0
52–1/8"		55.0	55.0
25–1/2"	55"	55.0	55.0
36"		55.0	55.0
52–1/8"		55.0	55.0
25–1/2"	62"	55.0	55.0
36"		55.0	55.0
52–1/8"		55.0	55.0
23"	23"	55.0	55.0
47"		55.0	55.0
71"		55.0	55.0
83"		55.0	55.0
95"		55.0	55.0
107"		55.0	55.0
23"	35"	55.0	55.0
47"		55.0	55.0
71"		55.0	55.0
83"		55.0	55.0
95"		55.0	55.0
23"	47"	55.0	55.0
47"		55.0	55.0
71"		55.0	55.0
23"	59"	55.0	55.0
47"		55.0	55.0

NOTE:
GLASS CAPACITIES ON THIS SHEET ARE BASED ON ASTM E1300–09 (3 SEC. GUSTS) AND FLORIDA BUILDING COMMISSION DECLARATORY STATEMENT DCA05–DEC–219

8/11/20

FL #30309

JALAL FAROOQ
LICENSE
No. 81223
STATE OF FLORIDA
PROFESSIONAL ENGINEER

AL-FAROOQ CORPORATION
ENGINEERS & PRODUCT DEVELOPMENT
9360 SUNSET DRIVE, SUITE 220
MIAMI, FLORIDA 33173
(C.A.N. 3538)
TEL. (305) 264-8100 FAX. (305) 262-6978

COMP–ANL\19–68F–AWC

SERIES–100HR ALUM HORIZ. ROLLING WDW. (L.M.I.)

Alcon Windows And Doors Corp.
7240 N.W. 46th Street
Miami, FL. 33166
Tel. (305) 553–0229 Fax. (786) 363–8141

revisions:			
no	date	by	description

date: 07–25–19
scale: –
dr. by: TARIQ
chk. by:

drawing no. 19–68F

sheet 4.1 of 13

DESIGN LOAD CAPACITY – PSF (XOX SIZES)

INTERIOR FRAME DIMS.		W/O REINF.		WITH REINF.			
		GLASS 'A' & 'Ai'		GLASS TYPES 'B' & 'Bi'			
		W/ OR W/O JAMB ANC.		W/O JAMB ANCHORS		W/ JAMB ANCHORS	
WIDTH	HEIGHT	EXT.(+)	INT.(–)	EXT.(+)	INT.(–)	EXT.(+)	INT.(–)
73"	25"	70.0	70.0	80.0	95.0	80.0	95.0
105–1/4"		70.0	70.0	80.0	95.0	80.0	95.0
110"		70.0	70.0	80.0	95.0	80.0	95.0
111"		70.0	70.0	80.0	95.0	80.0	95.0
159–1/2"		–	–	80.0	95.0	80.0	95.0
73"	37–3/8"	70.0	70.0	80.0	95.0	80.0	95.0
105–1/4"		70.0	70.0	80.0	95.0	80.0	95.0
110"		70.0	70.0	80.0	95.0	80.0	95.0
111"		70.0	70.0	80.0	95.0	80.0	95.0
159–1/2"		–	–	80.0	95.0	80.0	95.0
73"	49–5/8"	70.0	70.0	80.0	95.0	80.0	95.0
105–1/4"		70.0	70.0	80.0	95.0	80.0	95.0
110"		70.0	70.0	80.0	95.0	80.0	95.0
111"		70.0	70.0	80.0	95.0	80.0	95.0
159–1/2"		–	–	80.0	95.0	80.0	95.0
73"	55"	70.0	70.0	80.0	95.0	80.0	95.0
105–1/4"		70.0	70.0	80.0	95.0	80.0	95.0
110"		70.0	70.0	80.0	95.0	80.0	95.0
111"		70.0	70.0	80.0	95.0	80.0	95.0
159–1/2"		–	–	80.0	95.0	80.0	95.0
73"	62"	70.0	70.0	80.0	95.0	80.0	95.0
105–1/4"		70.0	70.0	80.0	95.0	80.0	95.0
110"		70.0	70.0	80.0	94.3	80.0	95.0
111"		70.0	70.0	80.0	93.7	80.0	95.0
159–1/2"		–	–	76.3	76.3	80.0	95.0
71"	23"	70.0	70.0	80.0	95.0	80.0	95.0
83"		70.0	70.0	80.0	95.0	80.0	95.0
95"		70.0	70.0	80.0	95.0	80.0	95.0
107"		70.0	70.0	80.0	95.0	80.0	95.0
119"		70.0	70.0	80.0	95.0	80.0	95.0
131"		70.0	70.0	80.0	95.0	80.0	95.0
143"		70.0	70.0	80.0	95.0	80.0	95.0
155"		70.0	70.0	80.0	95.0	80.0	95.0
71"	35"	70.0	70.0	80.0	95.0	80.0	95.0
83"		70.0	70.0	80.0	95.0	80.0	95.0
95"		70.0	70.0	80.0	95.0	80.0	95.0
107"		70.0	70.0	80.0	95.0	80.0	95.0
119"		70.0	70.0	80.0	95.0	80.0	95.0
131"		70.0	70.0	80.0	95.0	80.0	95.0
143"		70.0	70.0	80.0	95.0	80.0	95.0
155"		70.0	70.0	80.0	95.0	80.0	95.0
71"	47"	70.0	70.0	80.0	95.0	80.0	95.0
83"		70.0	70.0	80.0	95.0	80.0	95.0
95"		70.0	70.0	80.0	95.0	80.0	95.0
107"		70.0	70.0	80.0	95.0	80.0	95.0
119"		70.0	70.0	80.0	95.0	80.0	95.0
131"		70.0	70.0	80.0	95.0	80.0	95.0
143"		70.0	70.0	80.0	95.0	80.0	95.0
155"		–	–	80.0	95.0	80.0	95.0
71"	59"	70.0	70.0	80.0	95.0	80.0	95.0
83"		70.0	70.0	80.0	95.0	80.0	95.0
95"		70.0	70.0	80.0	95.0	80.0	95.0
107"		70.0	70.0	80.0	95.0	80.0	95.0
119"		–	–	80.0	95.0	80.0	95.0
131"		–	–	80.0	94.6	80.0	95.0
143"		–	–	80.0	90.6	80.0	95.0
155"		–	–	80.0	87.6	80.0	95.0

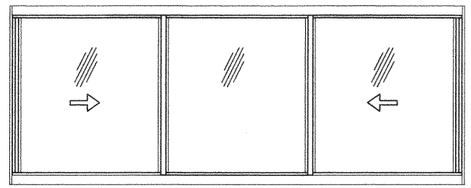

OPERATING VENTS TO BE 1/3 OF THE WINDOW WIDTH

'XOX'

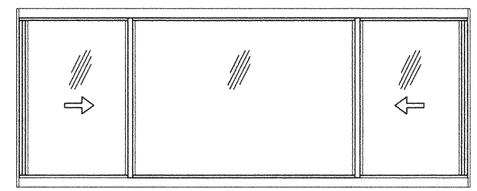

OPERATING VENTS TO BE 1/4 TO 1/3 OF THE WINDOW WIDTH

'XOX'

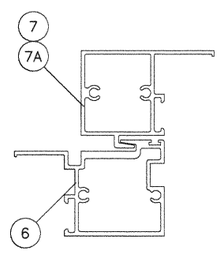

FIX. STILE
W/O REINF.

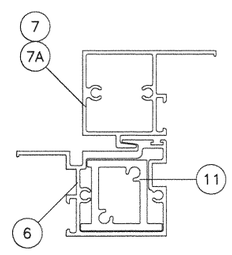

FIX. STILE
WITH REINF.

EXTERIOR LOADS SHOWN IN CHARTS ARE FOR WINDOWS WITH APPLIED RISER AT FRAME SILL. FOR STANDARD SILL (NO RISER) LIMIT MAX. EXTERIOR LOADS TO +66.7 PSF SEE SHEET 6 FOR DETAILS.

NOTE:
GLASS CAPACITIES ON THIS SHEET ARE BASED ON ASTM E1300–09 (3 SEC. GUSTS) AND FLORIDA BUILDING COMMISSION DECLARATORY STATEMENT DCA05–DEC–219

DESIGN LOAD CAPACITY – PSF (XOX SIZES)

INTERIOR FRAME DIMS.		W/O REINF.		WITH REINF.	
		GLASS 'A' & 'Ai'		GLASS 'B' & 'Bi'	
		W/ OR W/O JAMB ANC.		W/ OR W/O JAMB ANC.	
WIDTH	HEIGHT	EXT.(+)	INT.(–)	EXT.(+)	INT.(–)
73"	25"	70.0	70.0	80.0	95.0
105–1/4"		70.0	70.0	80.0	95.0
110"		70.0	70.0	80.0	95.0
111"		70.0	70.0	80.0	95.0
159–1/2"		70.0	70.0	80.0	95.0
73"	37–3/8"	70.0	70.0	80.0	95.0
105–1/4"		70.0	70.0	80.0	95.0
110"		70.0	70.0	80.0	95.0
111"		70.0	70.0	80.0	95.0
159–1/2"		–	–	80.0	95.0
73"	49–5/8"	70.0	70.0	80.0	95.0
105–1/4"		–	–	80.0	95.0
110"		–	–	80.0	95.0
111"		–	–	80.0	95.0
73"	55"	70.0	70.0	80.0	95.0
105–1/4"		–	–	80.0	95.0
110"		–	–	80.0	95.0
111"		–	–	80.0	95.0
73"	62"	70.0	70.0	80.0	95.0
105–1/4"		–	–	80.0	95.0
71"	23"	70.0	70.0	80.0	95.0
83"		70.0	70.0	80.0	95.0
95"		70.0	70.0	80.0	95.0
107"		70.0	70.0	80.0	95.0
119"		70.0	70.0	80.0	95.0
131"		70.0	70.0	80.0	95.0
143"		70.0	70.0	80.0	95.0
155"		70.0	70.0	80.0	95.0
71"	35"	70.0	70.0	80.0	95.0
83"		70.0	70.0	80.0	95.0
95"		70.0	70.0	80.0	95.0
107"		70.0	70.0	80.0	95.0
119"		70.0	70.0	80.0	95.0
131"		70.0	70.0	80.0	95.0
143"		–	–	80.0	95.0
155"		–	–	80.0	95.0
71"	47"	70.0	70.0	80.0	95.0
83"		70.0	70.0	80.0	95.0
95"		70.0	70.0	80.0	95.0
107"		–	–	80.0	95.0
119"		–	–	80.0	95.0
131"		–	–	80.0	95.0
71"	59"	70.0	70.0	80.0	95.0
83"		–	–	80.0	95.0
95"		–	–	80.0	95.0
107"		–	–	80.0	95.0

JALAL FAROOQ
LICENSE
No. 81223
STATE OF FLORIDA
PROFESSIONAL ENGINEER

8/11/20

FL #30309

AL-FAROOQ CORPORATION
ENGINEERS & PRODUCT DEVELOPMENT
9360 SUNSET DRIVE, SUITE 220
MIAMI, FLORIDA 33173
(C.A.N. 3538)
TEL. (305) 264-8100 FAX. (305) 262-6978

COMP–ANL\19–68F–AWC

SERIES–100HR ALUM HORIZ. ROLLING WDW. (L.M.I.)

Alcon Windows And Doors Corp.
7240 N.W. 46th Street
Miami, FL. 33166
Tel. (305) 553–0229 Fax. (786) 363–8141

revisions:

no	date	by	description

date: 07–25–19
scale: –
dr. by: TARIQ
chk. by:

drawing no.
19–68F

DESIGN LOAD CAPACITY – PSF (XOX SIZES)			
INTERIOR FRAME DIMS.		W/O REINF. GLASS TYPE 'C' W/ OR W/O JAMB ANC.	
WIDTH	HEIGHT	EXT.(+)	INT.(–)
73"	25"	55.0	55.0
105–1/4"		55.0	55.0
110"		55.0	55.0
111"		55.0	55.0
73"	37–3/8"	55.0	55.0
105–1/4"		55.0	55.0
110"		55.0	55.0
111"		55.0	55.0
73"	49–5/8"	55.0	55.0
105–1/4"		55.0	55.0
110"		55.0	55.0
111"		55.0	55.0
73"	55"	55.0	55.0
105–1/4"		55.0	55.0
110"		55.0	55.0
111"		55.0	55.0
73"	62"	55.0	55.0
105–1/4"		55.0	55.0
110"		55.0	55.0
111"		55.0	55.0
71"	23"	55.0	55.0
83"		55.0	55.0
95"		55.0	55.0
107"		55.0	55.0
119"		55.0	55.0
131"		55.0	55.0
143"		55.0	55.0
155"		55.0	55.0
71"	35"	55.0	55.0
83"		55.0	55.0
95"		55.0	55.0
107"		55.0	55.0
119"		55.0	55.0
131"		55.0	55.0
143"		55.0	55.0
155"		55.0	55.0
71"	47"	55.0	55.0
83"		55.0	55.0
95"		55.0	55.0
107"		55.0	55.0
119"		55.0	55.0
131"		55.0	55.0
143"		55.0	55.0
71"	59"	55.0	55.0
83"		55.0	55.0
95"		55.0	55.0
107"		55.0	55.0

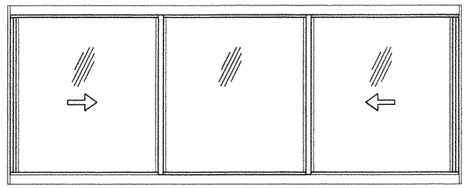

OPERATING VENTS TO BE 1/3 OF THE WINDOW WIDTH

'XOX'

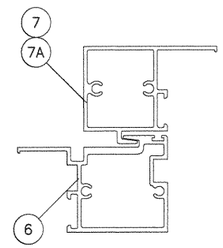

FIX. STILE
W/O REINF.

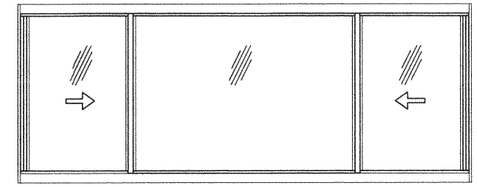

OPERATING VENTS TO BE 1/4 TO 1/3 OF THE WINDOW WIDTH

'XOX'

DESIGN LOAD CAPACITY – PSF (XOX SIZES)			
INTERIOR FRAME DIMS.		W/O REINF. GLASS TYPE 'C' W/ OR W/O JAMB ANC.	
WIDTH	HEIGHT	EXT.(+)	INT.(–)
73"	25"	55.0	55.0
105–1/4"		55.0	55.0
110"		55.0	55.0
111"		55.0	55.0
159–1/2"		55.0	55.0
73"	37–3/8"	55.0	55.0
105–1/4"		55.0	55.0
110"		55.0	55.0
111"		55.0	55.0
73"	49–5/8"	55.0	55.0
73"	55"	55.0	55.0
73"	62"	55.0	55.0
71"	23"	55.0	55.0
83"		55.0	55.0
95"		55.0	55.0
107"		55.0	55.0
119"		55.0	55.0
131"		55.0	55.0
143"		55.0	55.0
155"		55.0	55.0
71"	35"	55.0	55.0
83"		55.0	55.0
95"		55.0	55.0
107"		55.0	55.0
119"		55.0	55.0
131"		55.0	55.0
71"	47"	55.0	55.0
83"		55.0	55.0
95"		55.0	55.0
71"	59"	55.0	55.0

NOTE:
GLASS CAPACITIES ON THIS SHEET ARE BASED ON ASTM E1300–09 (3 SEC. GUSTS) AND FLORIDA BUILDING COMMISSION DECLARATORY STATEMENT DCA05–DEC–219

JALAL FAROOQ
LICENSE
No. 81223
STATE OF FLORIDA
PROFESSIONAL ENGINEER

8/11/20
FL #30309

AL-FAROOQ CORPORATION
ENGINEERS & PRODUCT DEVELOPMENT
9360 SUNSET DRIVE, SUITE 220
MIAMI, FLORIDA 33173
(C.A.N. 3538)
TEL. (305) 264-8100 FAX. (305) 262-6978

COMP–ANL\19–68F–AWC

SERIES–100HR ALUM HORIZ. ROLLING WDW. (L.M.I.)

Alcon Windows And Doors Corp.
7240 N.W. 46th Street
Miami, FL. 33166
Tel. (305) 553–0229 Fax. (786) 363–8141

revisions:

no	date	by	description

date: 07–25–19
scale: –
dr. by: TARIQ
chk. by:

drawing no.
19–68F

sheet 5.1 of 13

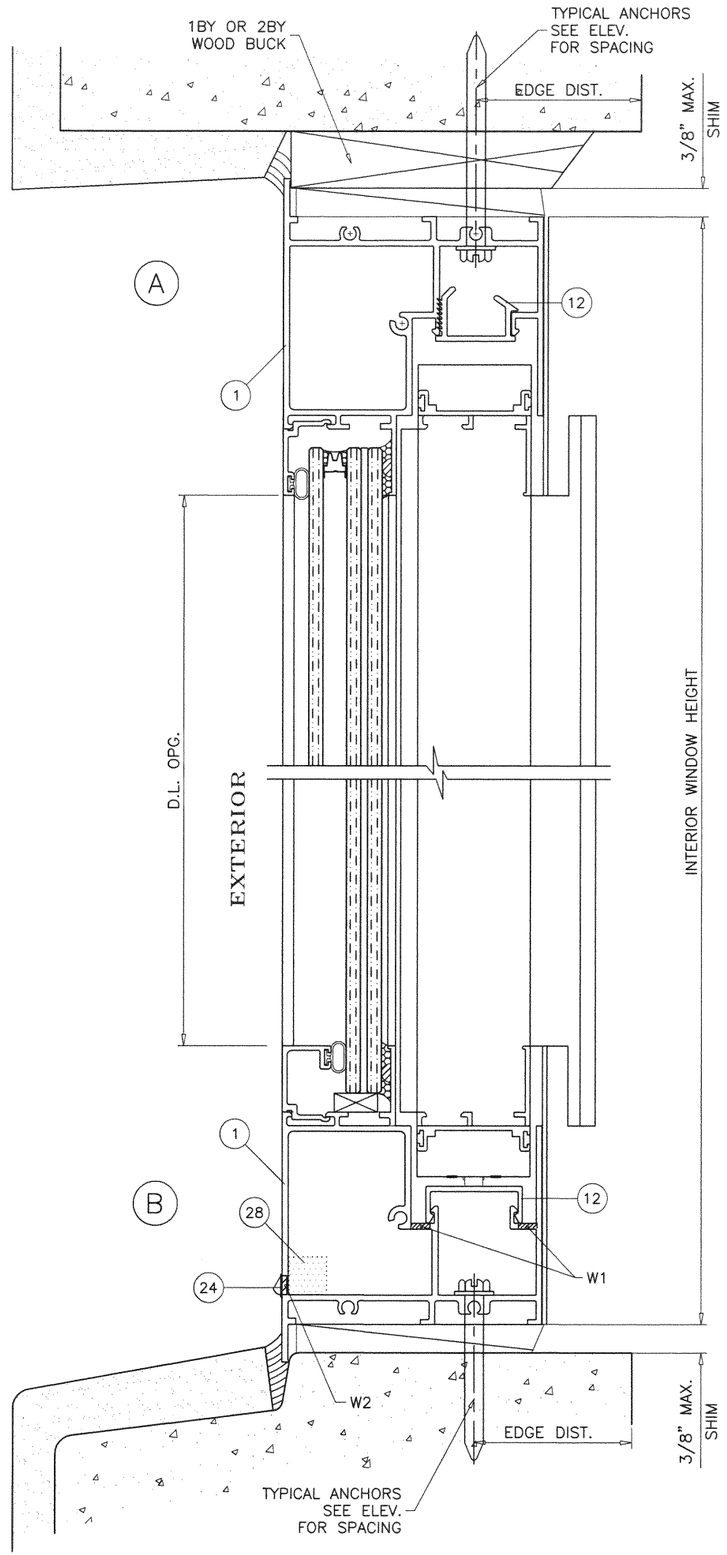

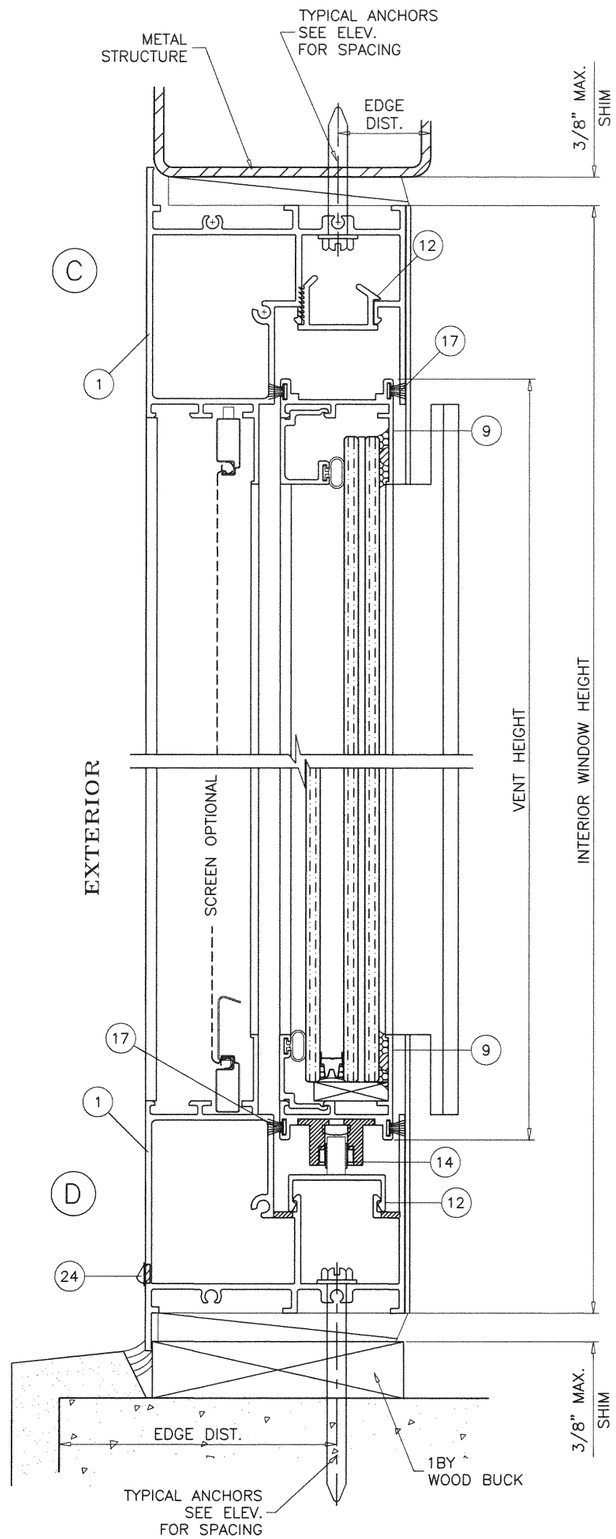

WEEPHOLES:

W1 = 5/16" X 2" NOTCH AT EACH END

W2 = 5/16" X 1-3/4" WEEP NOTCHES AT 4-1/2" FROM EACH END AND 50" O.C. WITH BAFFLE.

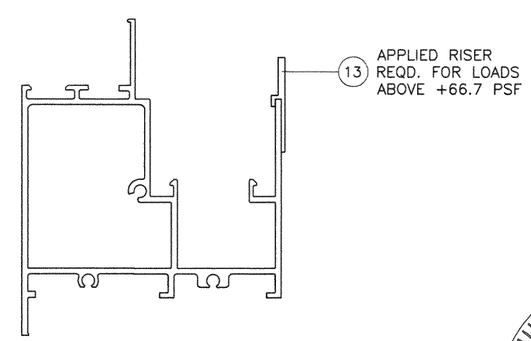

8/11/20

FL #30309

JALAL FAROOQ
LICENSE
No. 81223
STATE OF FLORIDA
PROFESSIONAL ENGINEER

AL-FAROOQ CORPORATION
ENGINEERS & PRODUCT DEVELOPMENT
9360 SUNSET DRIVE, SUITE 220
MIAMI, FLORIDA 33173 (C.A.N. 3538)
TEL. (305) 264-8100 FAX. (305) 262-6978

COMP-ANL\19-68F-AWC

SERIES-100HR ALUM HORIZ. ROLLING WDW. (L.M.I.)

Alcon Windows And Doors Corp.
7240 N.W. 46th Street
Miami, FL. 33166
Tel. (305) 553-0229 Fax. (786) 363-8141

revisions:			
no	date	by	description

date: 07-25-19

scale: 1/2" = 1"

dr. by: TARIQ

chk. by:

drawing no. 19-68F

sheet 6 of 13

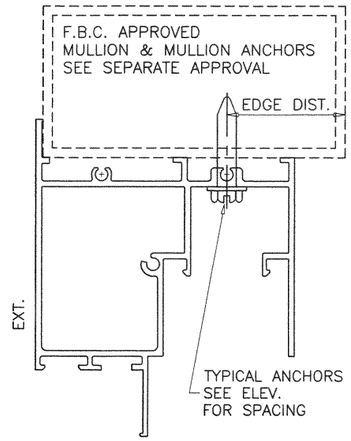

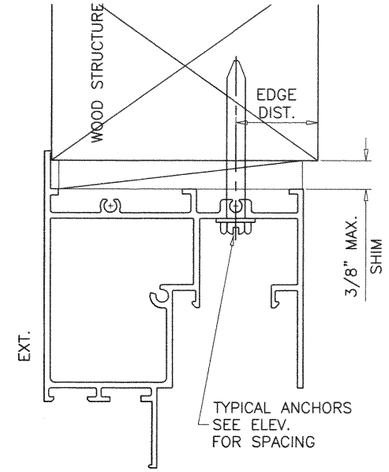

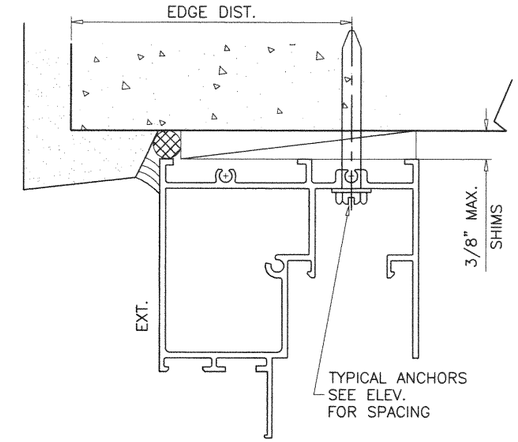

FLUSH FRAME WITH
TRIMMED EXTERIOR FLANGE

WOOD BUCKS AND METAL STRUCTURE NOT BY 'ALCON WINDOWS'
MUST SUSTAIN LOADS IMPOSED BY GLAZING SYSTEM
AND TRANSFER THEM TO THE BUILDING STRUCTURE.

TYPICAL ANCHORS: SEE ELEV. FOR SPACING

1/4" DIA. ULTRACON+ BY 'DEWALT' (Fu=164 KSI, Fy=148 KSI)

INTO WOOD STRUCTURES
2" MIN. PENETRATION INTO WOOD (HEAD/SILL/JAMBS)

THRU 1BY OR 2BY WOOD BUCKS INTO CONC. OR BLOCKS
1-1/4" MIN. EMBED INTO CONCRETE (HEAD/SILL/JAMBS)
1-1/4" MIN. EMBED INTO BLOCKS (JAMBS)

DIRECTLY INTO CONCRETE OR BLOCKS
2" MIN. EMBED INTO CONCRETE (HEAD/SILL/JAMBS)
2" MIN. EMBED INTO GROUT FILLED BLOCKS (JAMBS)

1/4" DIA. TEKS OR SELF-DRILLING SCREWS (GRADE 5 CRS)

INTO F.B.C. APPROVED MULLIONS
OR
INTO METAL STRUCTURES (HEAD/SILL/JAMBS)
(3) THREADS MIN. TO EXTEND BEYOND METAL THICKNESS
ALUMINUM: 1/8" THK. MIN. (6063-T5 MIN.)
STEEL: 1/8" THK. MIN. (Fy = 36 KSI MIN.)
(STEEL IN CONTACT WITH ALUMINUM TO BE PLATED OR PAINTED)

TYPICAL EDGE DISTANCE

INTO CONCRETE AND BLOCKS = 2-1/2" MIN.
INTO WOOD STRUCTURE = 1" MIN.
INTO METAL STRUCTURE = 3/4" MIN.

WOOD AT HEAD, SILL OR JAMBS SG = 0.55 MIN.
CONCRETE AT HEAD, SILL OR JAMBS f'c = 3000 PSI MIN.
C-90 HOLLOW/FILLED BLOCK AT JAMBS f'm = 2000 PSI MIN.

JALAL FAROOQ
LICENSE
No. 81223
STATE OF FLORIDA
PROFESSIONAL ENGINEER

8/11/20
FL #30309

AL-FAROOQ CORPORATION
ENGINEERS & PRODUCT DEVELOPMENT
9360 SUNSET DRIVE, SUITE 220
MIAMI, FLORIDA 33173 (C.A.N. 3538)
TEL. (305) 264-8100 FAX. (305) 262-6978
COMP-ANL\19-68F-AWC

SERIES-100HR ALUM HORIZ. ROLLING WDW. (L.M.I.)

Alcon Windows And Doors Corp.
7240 N.W. 46th Street
Miami, FL. 33166
Tel. (305) 553-0229 Fax. (786) 363-8141

revisions:

no	date	by	description

date: 07-25-19
scale: 1/2" = 1"
dr. by: TARIQ
chk. by:

drawing no.
19-68F

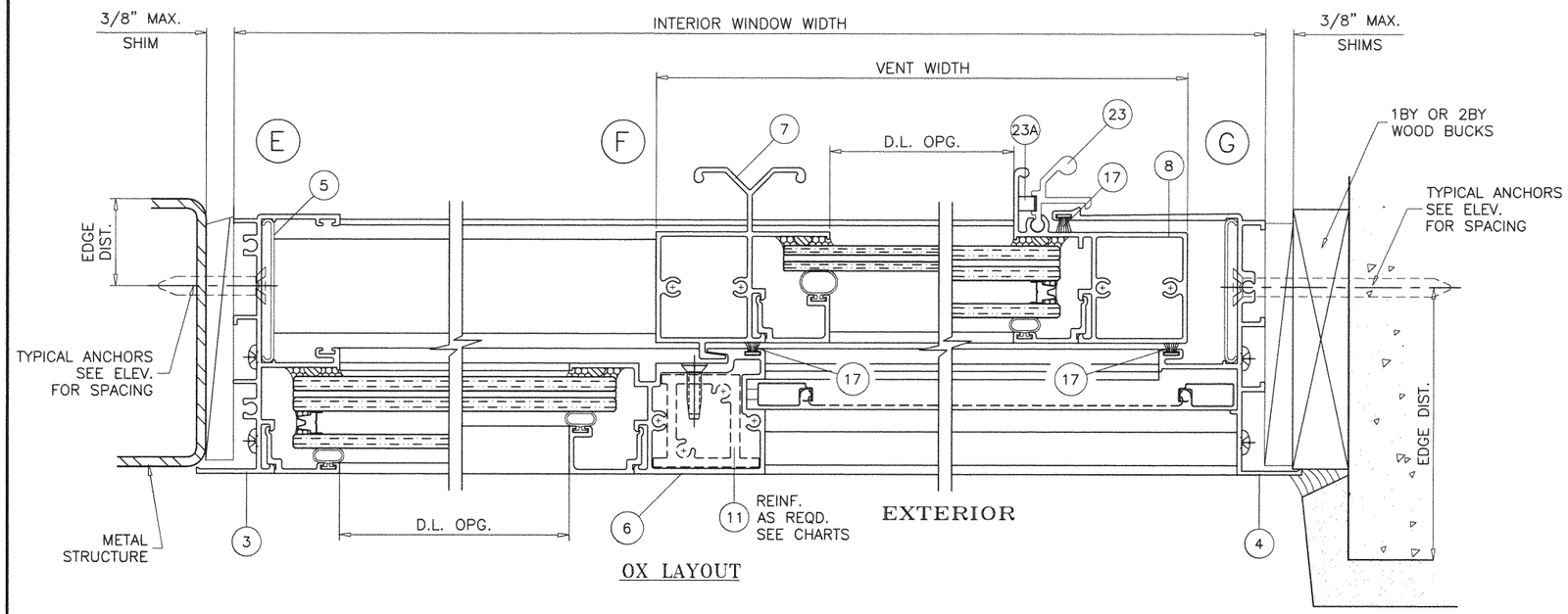

OX LAYOUT

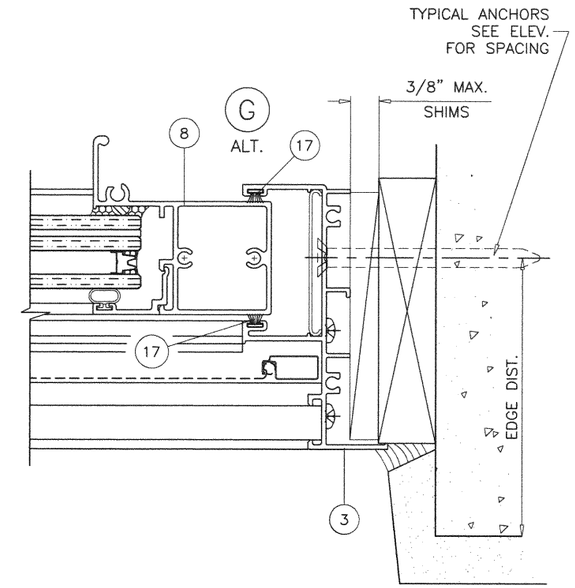

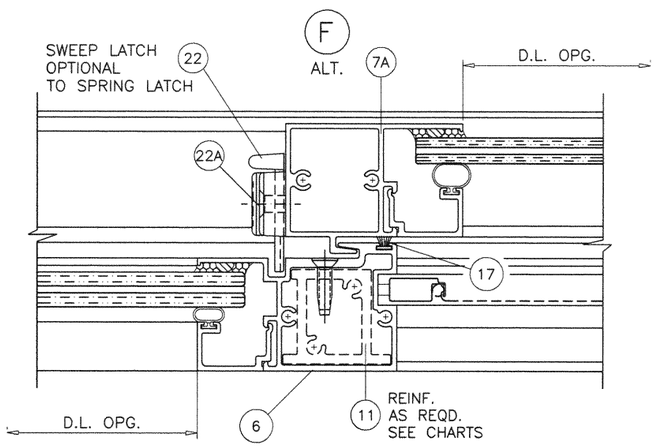

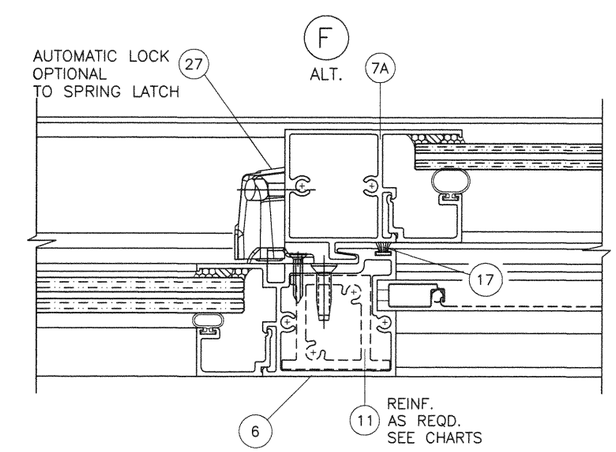

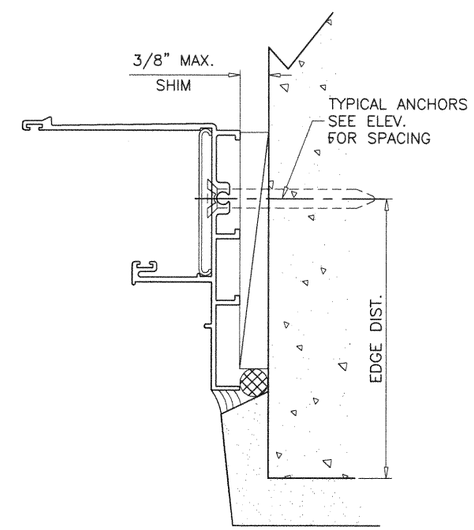

FLUSH FRAME WITH
TRIMMED EXTERIOR FLANGE
APPLICABLE TO MOV. AND FIX. JAMBS

JALAL FAROOQ
LICENSE
No. 81223
STATE OF FLORIDA
PROFESSIONAL ENGINEER

8/11/20
FL #30309

AL-FAROOQ CORPORATION
ENGINEERS & PRODUCT DEVELOPMENT
9360 SUNSET DRIVE, SUITE 220
MIAMI, FLORIDA 33173
(C.A.N. 3538)
TEL. (305) 264-8100 FAX. (305) 262-6978

COMP-ANL\19-68F-AWC

SERIES-100HR ALUM HORIZ. ROLLING WDW. (L.M.I.)

Alcon Windows And Doors Corp.
7240 N.W. 46th Street
Miami, FL. 33166
Tel. (305) 553-0229 Fax. (786) 363-8141

revisions:

no	date	by	description

date: 07-25-19
scale: 1/2" = 1"
dr. by: TARIQ
chk. by:

drawing no.
19-68F

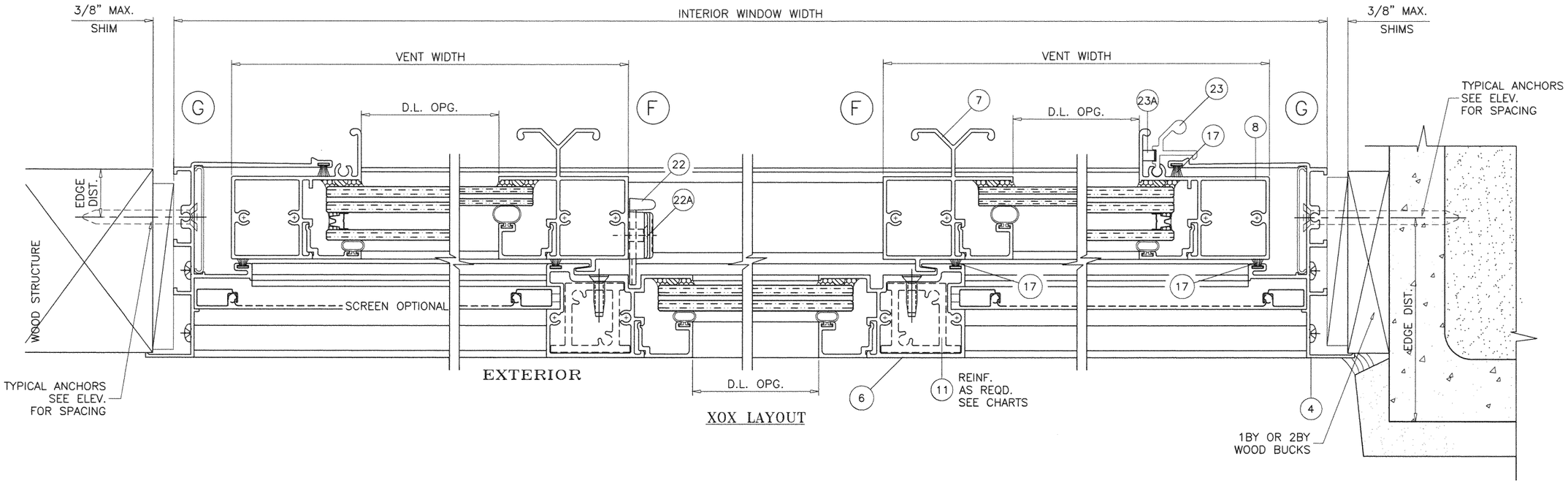

XOX LAYOUT

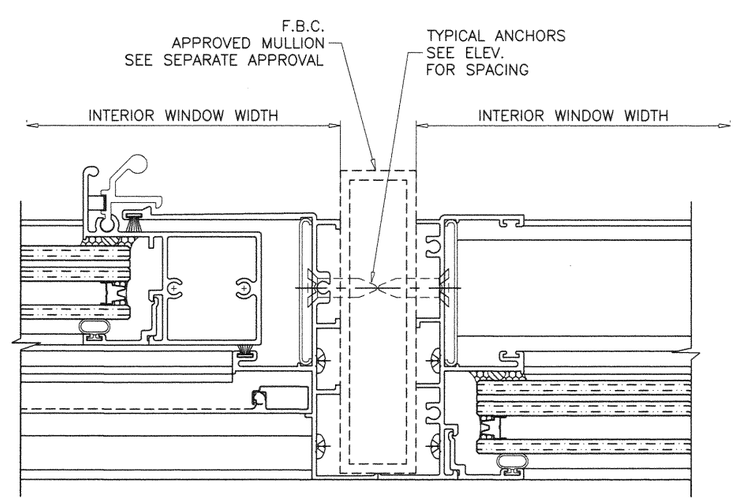

JALAL FAROOQ
LICENSE
No. 81223
STATE OF FLORIDA
PROFESSIONAL ENGINEER

8/11/20
FL #30309

AL-FAROOQ CORPORATION
ENGINEERS & PRODUCT DEVELOPMENT
9360 SUNSET DRIVE, SUITE 220
MIAMI, FLORIDA 33173 (C.A.N. 3538)
TEL. (305) 264-8100 FAX. (305) 262-6978

COMP-ANL\19-68F-AWC

SERIES-100HR ALUM HORIZ. ROLLING WDW. (L.M.I.)

Alcon Windows And Doors Corp.
7240 N.W. 46th Street
Miami, FL. 33166
Tel. (305) 553-0229 Fax. (786) 363-8141

revisions:			
no	date	by	description

date: 07-25-19
scale: 1/2" = 1"
dr. by: TARIQ
chk. by:

drawing no.
19-68F

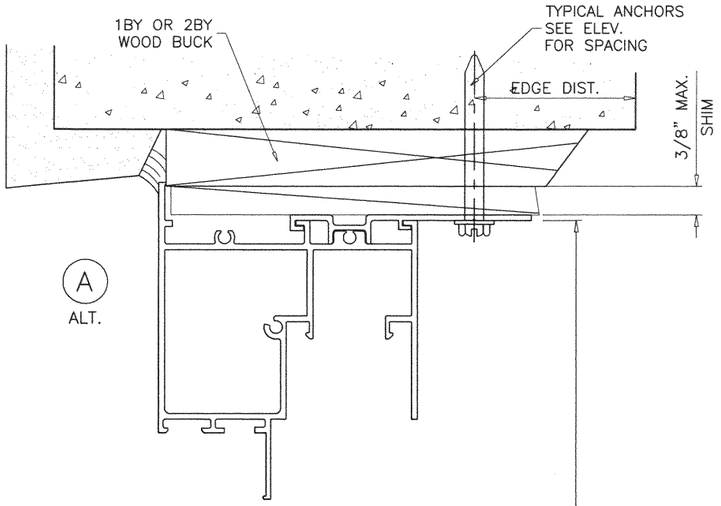

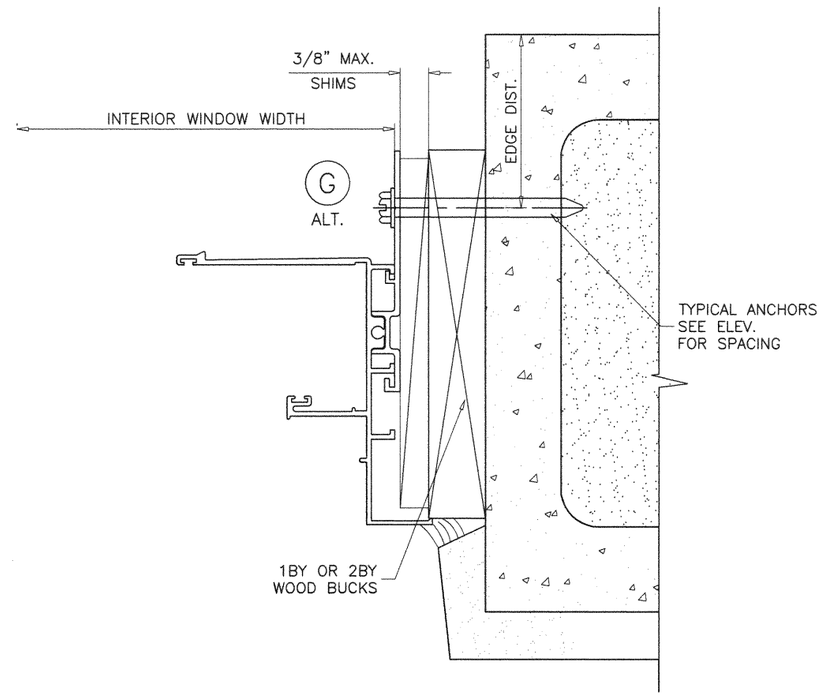

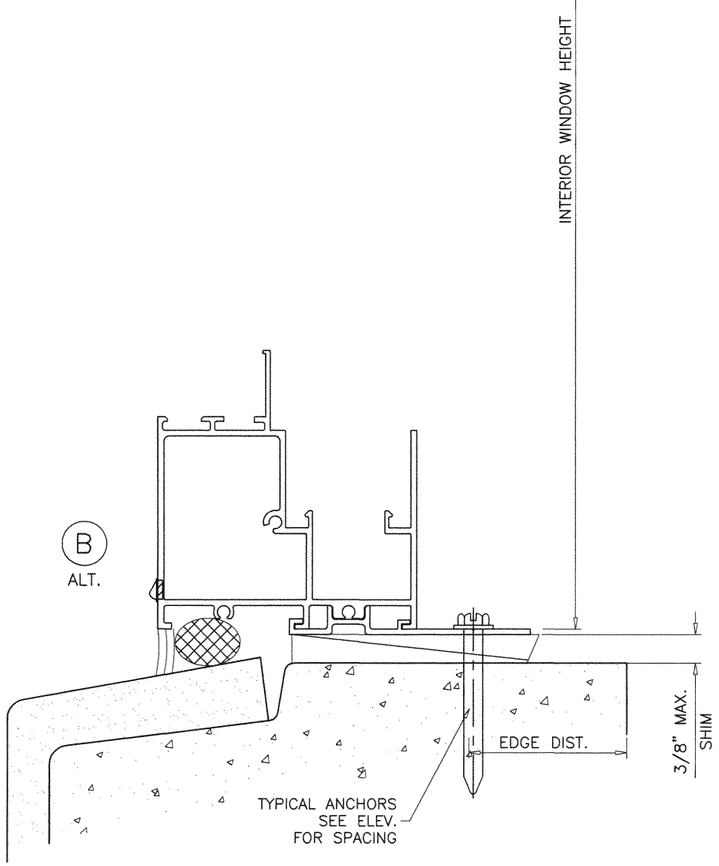

INSTALLATION DETAILS WITH ANCHOR CLIP (FLUSH & FLANGE FRAMES)

WINDOWS CAN BE INSTALLED BY USING ANCHOR CLIPS AT HEAD, SILL AND JAMBS.
CLIP INSTALLATION CAN BE IN ANY SUBSTRATE SHOWN FOR ANCHORS THRU FRAMES
SEE SHEETS 6 THRU 9 FOR DETAILS

JALAL FAROOQ
LICENSE
No. 81223
STATE OF FLORIDA
PROFESSIONAL ENGINEER

8/11/20

FL #30309

AL-FAROOQ CORPORATION
ENGINEERS & PRODUCT DEVELOPMENT
9360 SUNSET DRIVE, SUITE 220
MIAMI, FLORIDA 33173 (C.A.N. 3538)
TEL. (305) 264-8100 FAX. (305) 262-6978
COMP-ANL\19-68F-AWC

SERIES-100HR ALUM HORIZ. ROLLING WDW. (L.M.I.)

Alcon Windows And Doors Corp.
7240 N.W. 46th Street
Miami, FL. 33166
Tel. (305) 553-0229 Fax. (786) 363-8141

revisions:			
no	date	by	description

date: 07-25-19
scale: 1/2" = 1"
dr. by: TARIQ
chk. by:

drawing no.
19-68F

ITEM	PART #	QUANTITY	DESCRIPTION	MATERIAL	MANF./SUPPLIER/REMARKS
1	101B	1	FRAME HEAD/SILL	6063–T6	PROFILE
2	G107	1	HEAD COVER	PVC	CENTRAL PLASTICS
3	116	AS REQD.	FRAME JAMB (MOVING/FIXED)	6063–T6	PROFILE
4	104	AS REQD.	FRAME JAMB (MOVING)	6063–T6	PROFILE
5	G104	AS REQD.	JAMB COVER	PVC	CENTRAL PLASTICS
6	108	1/ VENT	FIXED MTG. RAIL	6063–T6	PROFILE
7	107	1/ VENT	VENT INTERLOCK W/ HANDLE	6063–T6	PROFILE
7A	118	1/ VENT	VENT INTERLOCK W/O HANDLE	6063–T6	PROFILE
8	106	1/ VENT	JAMB STILE	6063–T6	PROFILE
9	102	2/ VENT	TOP AND BOTTOM RAIL	6063–T6	PROFILE
10	115	AS REQD.	GLAZING BEAD (7/16" LAM. GLASS)	6063–T6	PROFILE
10A	103	AS REQD.	GLAZING BEAD (INSUL. LAM. GLASS)	6063–T6	PROFILE
10B	119	AS REQD.	GLAZING BEAD (5/16" LAM. GLASS)	6063–T6	PROFILE
11	111	AS REQD.	FIX. STILE REINFORCING (FULL LENGTH)	6063–T6	PROFILE
12	110	AS REQD.	TRACK	6063–T6	PROFILE
13	114	AS REQD.	SILL RISER	6063–T5	PROFILE
14	G101	2/ VENT	ROLLER HOUSING	NYLON	M&M PLASTICS
15	#10 X 1 3/4"	AS REQD.	FRAME/VENT ASSEMBLY FASTENERS	CRS	PH PH SMS
16	#10 X 2"	2/ VENT	SHEAR BLOCK ASSEMBLY FASTENERS	CRS	PH PH SMS
17	W71321	AS REQD.	FIN SEAL W'STRIPPING	–	ULTRAFAB
18	G20618	AS REQD.	GLAZING BEAD BULB	NEOPRENE	ULTRAFAB
19	109	AS REQD.	ANCHOR CLIP	6063–T6	PROFILE
20	W71221	AS REQD.	JAMB STILE W'STRIPPING	VINYL	ULTRAFAB
21	–	AS REQD.	SETTING BLOCK AT 1/4 POINTS	EPDM	DUROMETER 80±5 SHORE A
22	SL203P	2/ VENT	SWEEP LATCH, AT 9 1/2" FROM EACH END	ZAMAK	SULLIVAN & ASSOC.
22A	#8 X 1/2"	2/ LATCH	LATCH INST. SCREW	ST. STEEL	PH FH SMS
23	–	2/ VENT	SPRING LOADED LATCH, AT 10" FROM EACH END	6063–T6	ALTERNATE TO SWEEP LATCH
23A	G106	2/ LATCH	LATCH SPRING	ST. STEEL	SULLIVAN & ASSOC.
24	WA2L	2/ WDW.	HI–FLOW WEEPER	–	SULLIVAN & ASSOC.
25	FLB50–CLEAR	AS REQD.	GLASS SPACER/BUMPER	SILICONE	FRANK LOWE
26	–	OPTIONAL	5/16" BOX SCREEN	–	OPTIONAL
27	WL02	AS REQD.	AUTOMATIC LOCK	–	ROTO HARDWARE
28	–	AS REQD.	RETICULATED FOAM BAFFLE 30 PPI (1/2" X 1/2" X 1–1/2" LONG)	–	PREFERRED ENGINEERING PRODUCTS
29	–	–	–	–	–

SEALANT:

ALL JOINTS AND FRAME CONNECTIONS SEALED WITH WHITE/ALUMINUM COLORED GENERAL PURPOSE SILICONE.

FL #30309

JALAL FAROOQ
LICENSE
No. 81223
STATE OF FLORIDA
PROFESSIONAL ENGINEER

8/11/20

AL-FAROOQ CORPORATION
ENGINEERS & PRODUCT DEVELOPMENT
9360 SUNSET DRIVE, SUITE 220
MIAMI, FLORIDA 33173 (C.A.N. 3538)
TEL. (305) 264-8100 FAX. (305) 262-6978

COMP–ANL\19–68F–AWC

SERIES–100HR ALUM HORIZ. ROLLING WDW. (L.M.I.)

Alcon Windows And Doors Corp.
7240 N.W. 46th Street
Miami, FL. 33166
Tel. (305) 553–0229 Fax. (786) 363–8141

revisions:

no	date	by	description

date: 07–25–19
scale: 1/2" = 1"
dr. by: TARIQ
chk. by:

drawing no. 19–68F

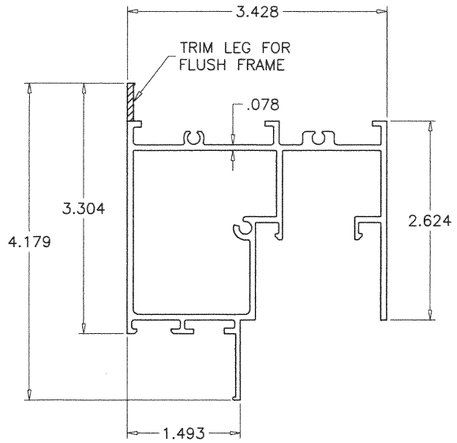

1 FRAME HEAD/SILL

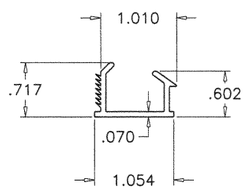

2 HEAD COVER

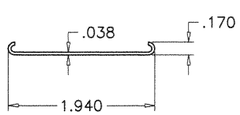

5 JAMB COVER

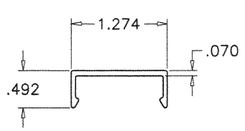

12 HEAD COVER

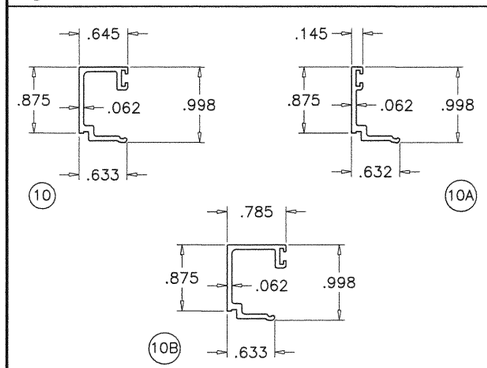

GLAZING BEADS

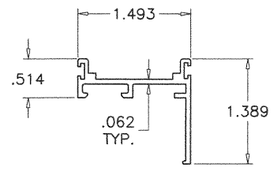

9 VENT TOP/BOTTOM RAIL

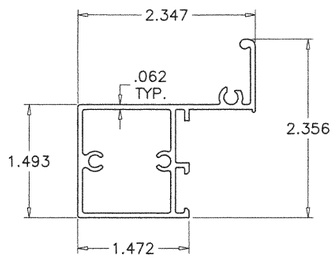

8 JAMB STILE

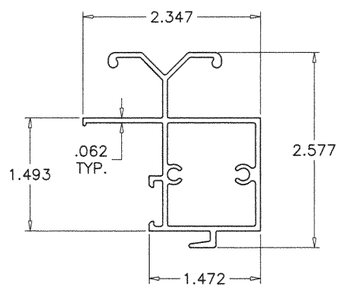

7 VENT INTERLOCK W/ HANDLE

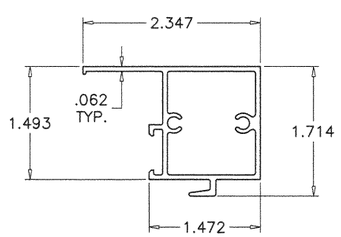

7A VENT INTERLOCK W/O HANDLE

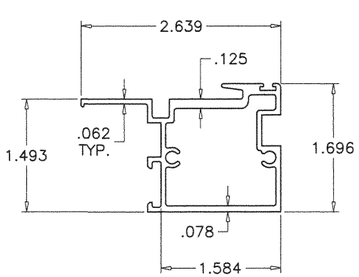

6 FIXED MTG. RAIL

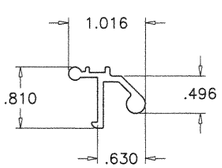

23 SPRING LOADED LATCH

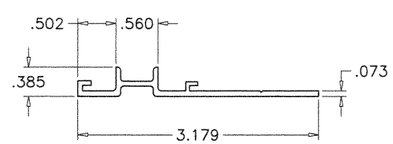

19 ANCHOR CLIP

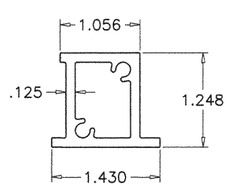

11 FIX. STILE REINFORCING

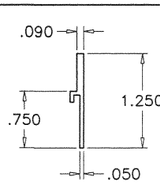

13 SILL RISER

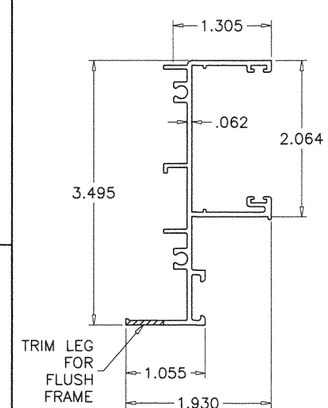

3 FRAME JAMB (MOVING/FIXED)

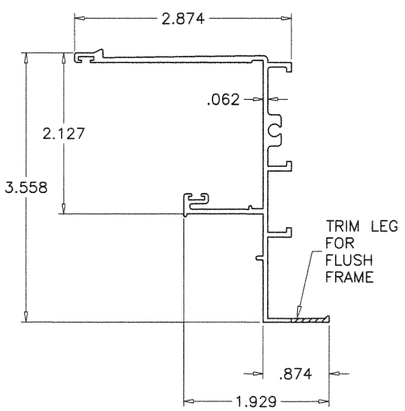

4 FRAME JAMB (MOVING)

FL #30309

8/11/20

JALAL FAROOQ
LICENSE
No. 81223
STATE OF FLORIDA
PROFESSIONAL ENGINEER

AL-FAROOQ CORPORATION
ENGINEERS & PRODUCT DEVELOPMENT
9360 SUNSET DRIVE, SUITE 220
MIAMI, FLORIDA 33173 (C.A.N. 3538)
TEL. (305) 264-8100 FAX. (305) 262-6978

COMP-ANL\19-68F-AWC

SERIES-100HR ALUM HORIZ. ROLLING WDW. (L.M.I.)

Alcon Windows And Doors Corp.
7240 N.W. 46th Street
Miami, FL. 33166
Tel. (305) 553-0229 Fax. (786) 363-8141

revisions:

no	date	by	description

date: 07-25-19
scale: 1/2" = 1"
dr. by: TARIQ
chk. by:

drawing no. 19-68F

sheet 12 of 13

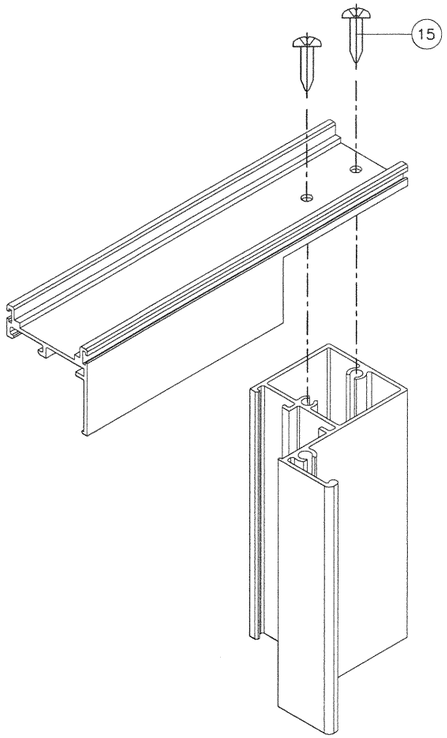

VENT TOP/BOTTOM CORNER

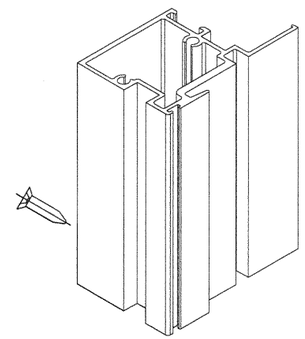

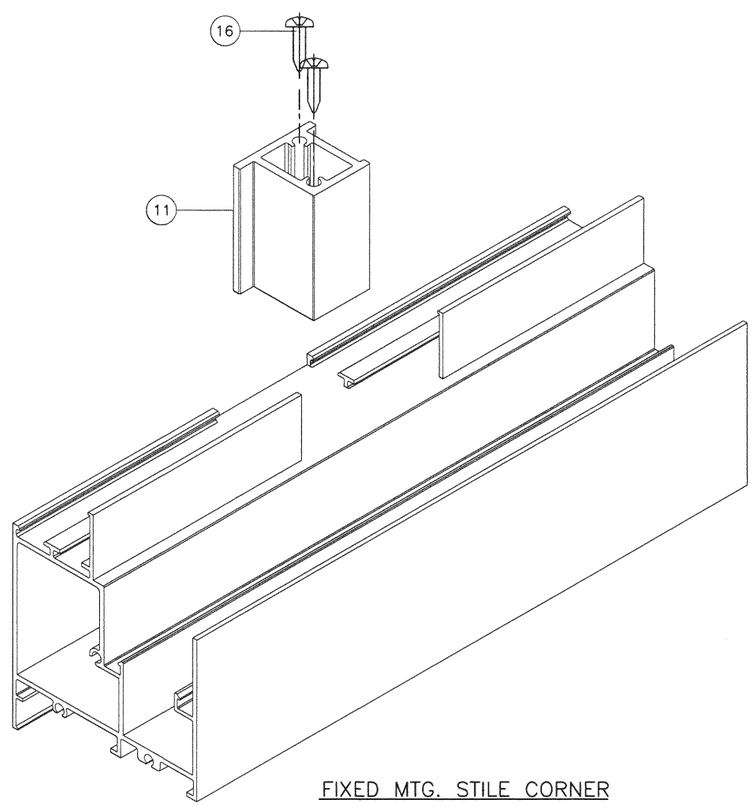

FIXED MTG. STILE CORNER

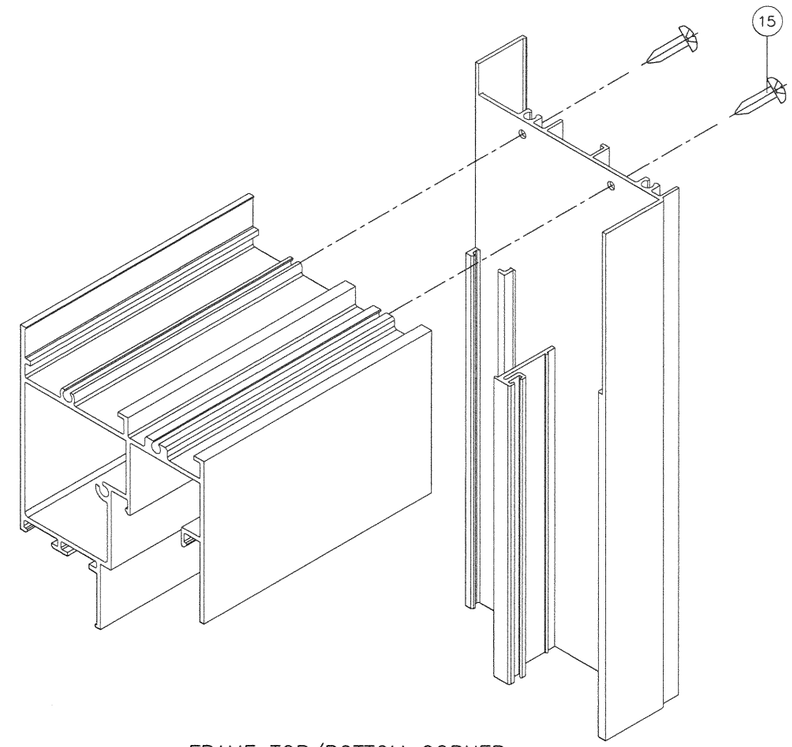

FRAME TOP/BOTTOM CORNER

JALAL FAROOQ
LICENSE
No. 81223
STATE OF FLORIDA
PROFESSIONAL ENGINEER

8/11/20
FL #30309

AL-FAROOQ CORPORATION
ENGINEERS & PRODUCT DEVELOPMENT
9360 SUNSET DRIVE, SUITE 220
MIAMI, FLORIDA 33173 (C.A.N. 3538)
TEL. (305) 264-8100 FAX. (305) 262-6978

COMP-ANL\19-68F-AWC

SERIES-100HR ALUM HORIZ. ROLLING WDW. (L.M.I.)

Alcon Windows And Doors Corp.
7240 N.W. 46th Street
Miami, FL. 33166
Tel. (305) 553-0229 Fax. (786) 363-8141

revisions:

no	date	by	description

date: 07-25-19
scale: 1/2" = 1"
dr. by: TARIQ
chk. by:

drawing no.
19-68F